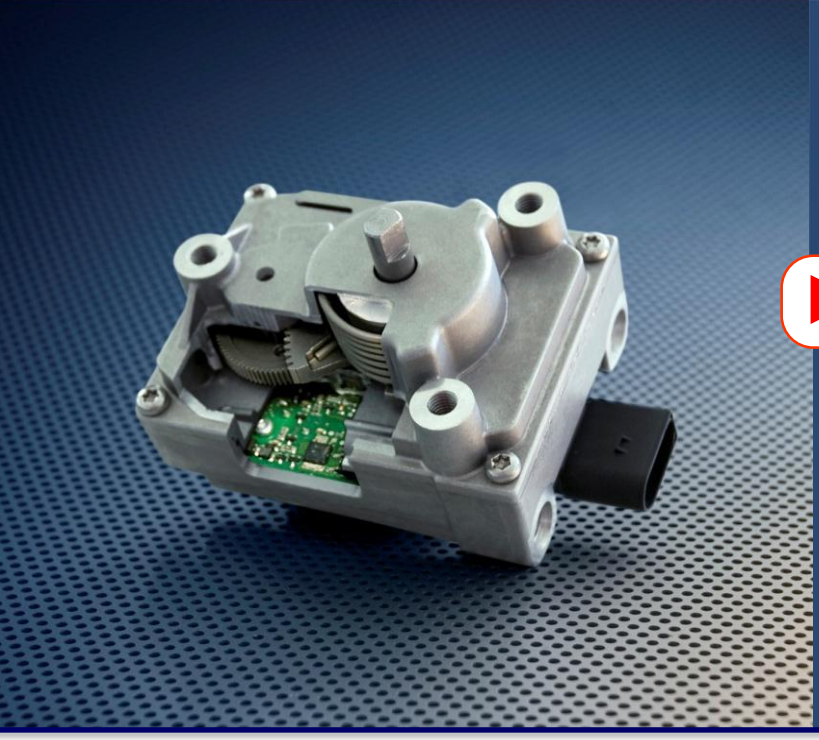

SONCEBOZ

▶ Smart BLDC Actuator

5847

- Peak Dynamic Torque..... 13 Nm
- Continuous Holding Torque..... 5.9 Nm
- Weight ..... 1.0 kg
- Communication..... CAN

The Smart BLDC actuator family, with more than 1 million parts on the market, became a Worldwide standard for Heavy duty trucks and Off Highway applications in Euro 6 / Tier 4 emission control systems. This 5847 is a version of the 5846 optimized for high peak torque demands like Heavy Duty Exhaust Back Pressure Valves or Direct Drive designs.

▶ Features & benefits

- Brushless DC motor with integrated CAN bus control electronics
- Flexible and customizable Software including diagnostic and dedicated features
- Integrated coolant canal
- Output shaft absolute position sensor as option
- Gearless actuator design available
- Suitable for most valve sizes thanks to its wide torque range.
- Proven exceptional reliability and service life in commercial and agricultural diesel harsh conditions
- Accurate positioning for finer flow control

▶ Performance and Endurance

Resolution	0.24	°
Span	110	°
Speed	93	RPM (2Nm load @ 24V)
Response Time	140	ms @ T_{90} to a 70° step
Gear ratio	1:49.2	2 stages
Lifetime	10 M	cycles @ 2Nm over T°C

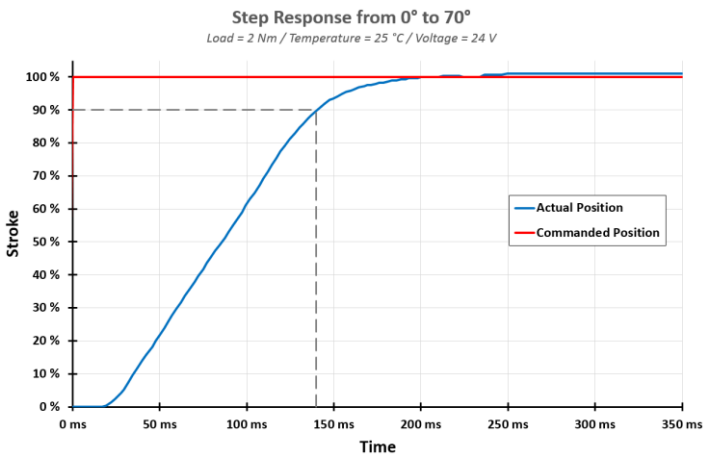

►Dimensions

Drawing not to scale. All dimensions in mm.
(Shaft and Failsafe positions flexible)

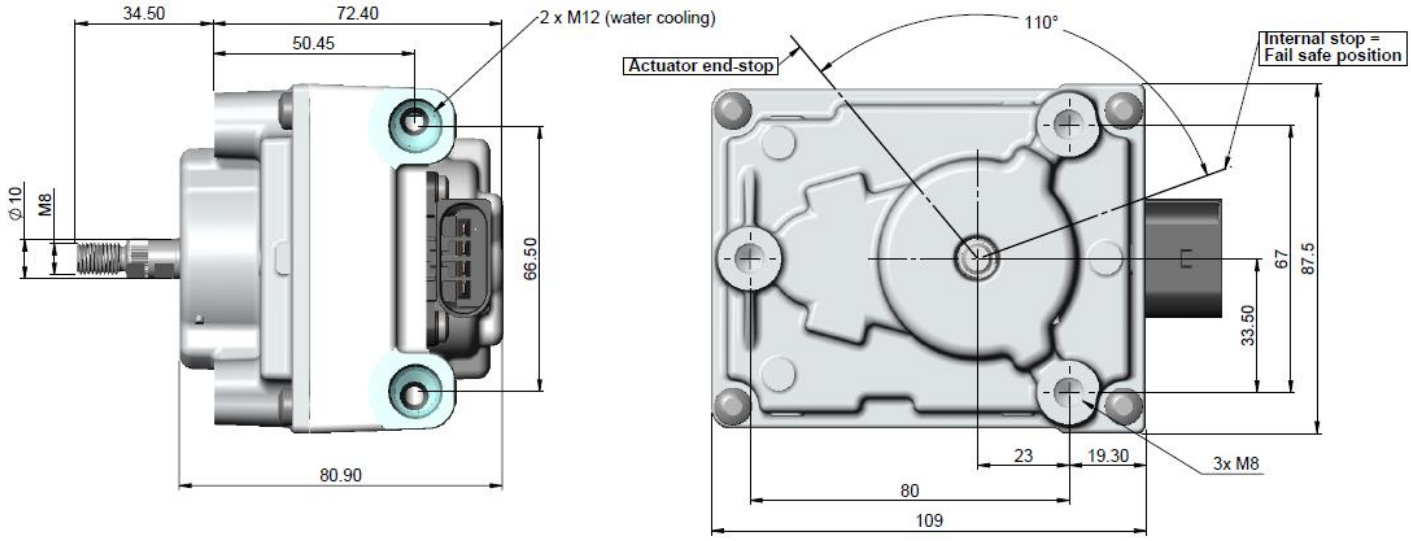

►Electrical and Mechanical Interface

Operating Voltage	6 to 36V with Integrated over and reverse-voltage protection according to ISO 16750-2
Integrated Connector	4 Pins: Kostal SLK2.8
Wire Harness alternatives	4 to 8 Pins, Tyco, Deutsch, Kostal…
Customer Specific Communication	Standard: CAN (Baud Rate: 250 or 500 kbits/s, automatic detection possible) Option: PWM, SENT, ANALOG, EASYPLUG
Failsafe	Clockwise, counter clockwise and intermediate stroke positions, various torque available
Output shaft	2 flats, knurls or M8 available and other design possible

►Operating conditions

Operating Temp. Range	-40ºC / +160°C (with water-cooling)
Vibration Level	Up to 26.5gRMS – Bandwidth 20-2000Hz
Protection Class and Waterproof	IP 6K9K (DIN 40050-9)
ROHS (Lead Free) and IMDS	Compliant
EMC	OEM standard compliance

Special requirements upon customer specifications. Right to change reserved. *<3.0>*

SONCEBOZ SA
2605 Sonceboz – Switzerland
Tel. +41(0) 32 488 11 11
Fax +41(0) 32 488 11 00
info@sonceboz.com - www.sonceboz.com

SONCEBOZ